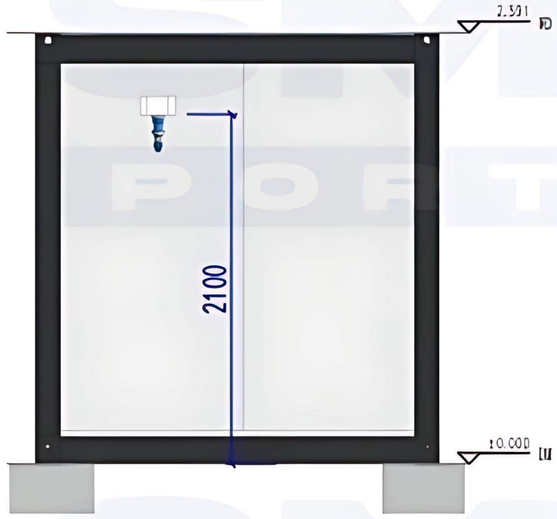

East Elev.

South Elev.

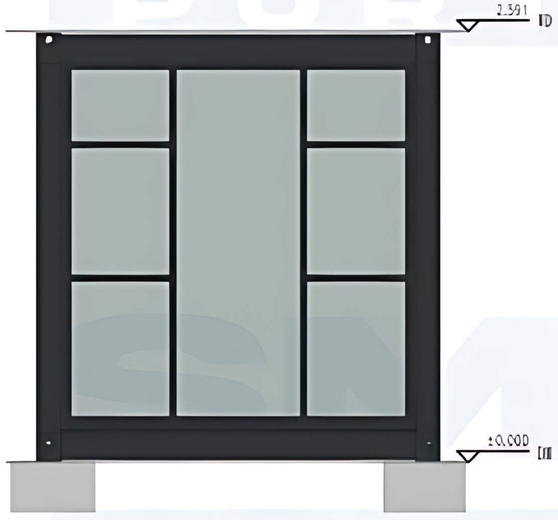

West Elevation

North Elev.

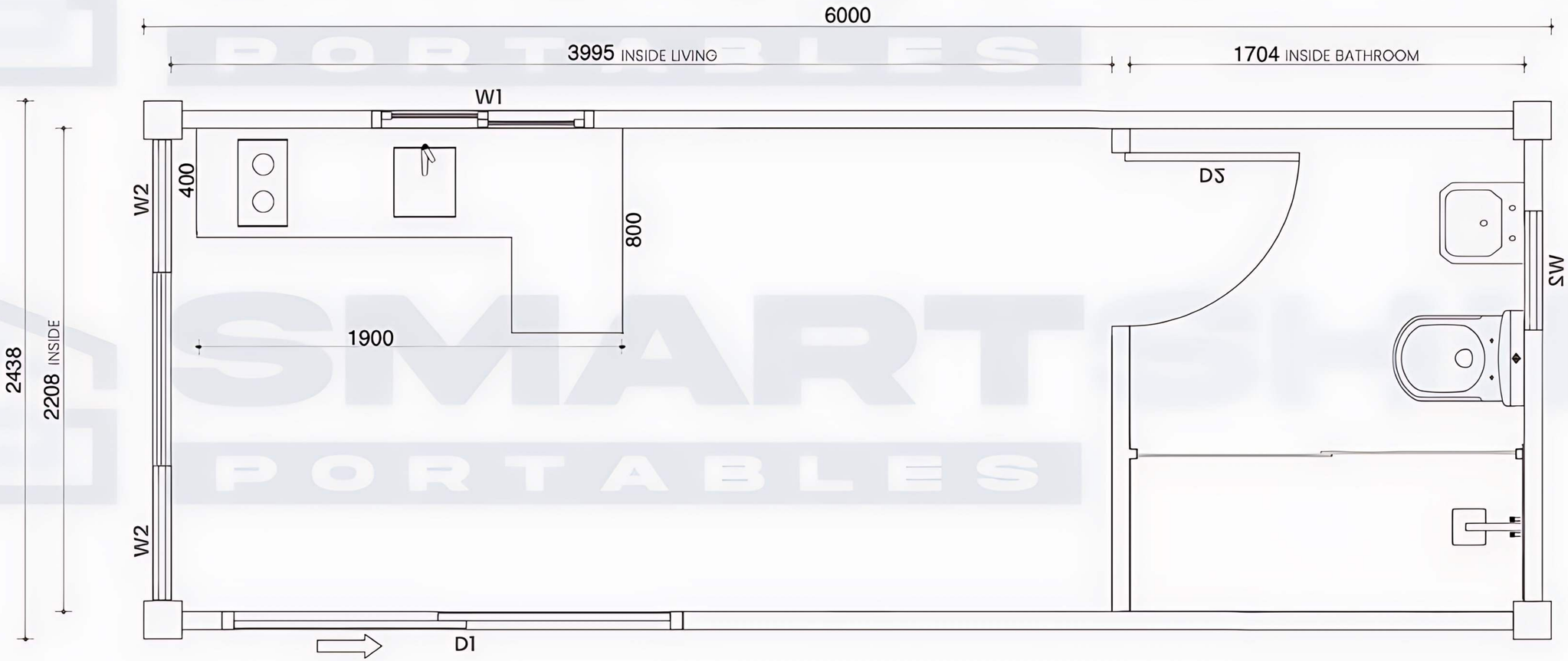

W1	Double sliding window	930W x 1100H
W2	Awning window	500W x 500H
D1	Sliding door	1030W x 2270H
D2	Hinged door	730W x 2040H

Note: All window and door dimensions include the outer frame